R19L100-67FTP(HB)

19" G-WIN IP67 Series Display

KEY FEATURES

- Totally sealed Full IP67 aluminum compact housing design
- 19-inch 1280 x 1024 panel with Projected Capacitive touch screen
- -10 to 55°C wide operating temperature
- Fanless, streamlined enclosure for highly efficient heat dissipation
- Rugged Front Anti-Impact Design
- Front control membrane keys lockable by software
- Full IP67 male connectors with external female cables

SPECIFICATIONS

Display			
Resolution	1280x1024	**Size**	19 inches
Contrast Ratio	1000:1	**Panel Brightness**	400 nits 1000 nits(Optional)
Display Color	16.7M Colors	**View Angles**	85,85,80,80
Active Area	376.32x301.06 mm	**Touch / Glass**	Projected Capacitive Multi Touch Screen Bonding With Panel
Optional function	High brightness Panel for sunlight readable (Optional)		
Mechanical			
Dimension	474 x 410 x 111 mm	**Mounting**	Panel mount VESA Mount
Enclosure	Aluminum Housing	**Cooling System**	Fanless design
Cut out	462 x 386mm		
Environment			
Operating Humidity	10% to 90% RH, Non-Condensing	**Operating Temperature**	-10°C to 55°C -40°C to 70°C (with intelligent heater)
Storage Temperature	-30°C to 70°C	**Shock**	MIL-STD-810G Method 516.6 Procedure I (Optional)
Vibration	MIL-STD-810G Method 514.6 Procedure I	**IP rating**	IP67
Certification			
Certification	CE, FCC		
IO Ports			
Power Input	1 x M12 waterproof connector for 9~36V DC	**USB Port**	1x M12 type connector for Touchscreen via USB signal
Serial Port	1 x M12 type connector for Touchscreen via RS232 signal (Optional)	**Video**	1x M12 type connector for VGA input 1x M21 type connector for HDMI input (Optional)
Indicator	1 x LED Indicator for power 1 x LED Indicator for status		
Control			
Button	1 x Power Button 1 x Adjust up button 1 x Adjust down button 1 x ESC (Auto) button		

	1 x OK (Menu) button

Accessory

Accessory	External open wire Power cable with waterproof connector External USB cable with waterproof connector External VGA cable with waterproof connector Waterproof caps Mounting clips VESA screws	**Optional Accessory**	100~240V AC to DC Adapter with power cord (Optional) External COM cable with waterproof connector (Optional) External HDMI cable with waterproof connector (Optional)

System Specification

DIMENSIONS

UNIT:MM

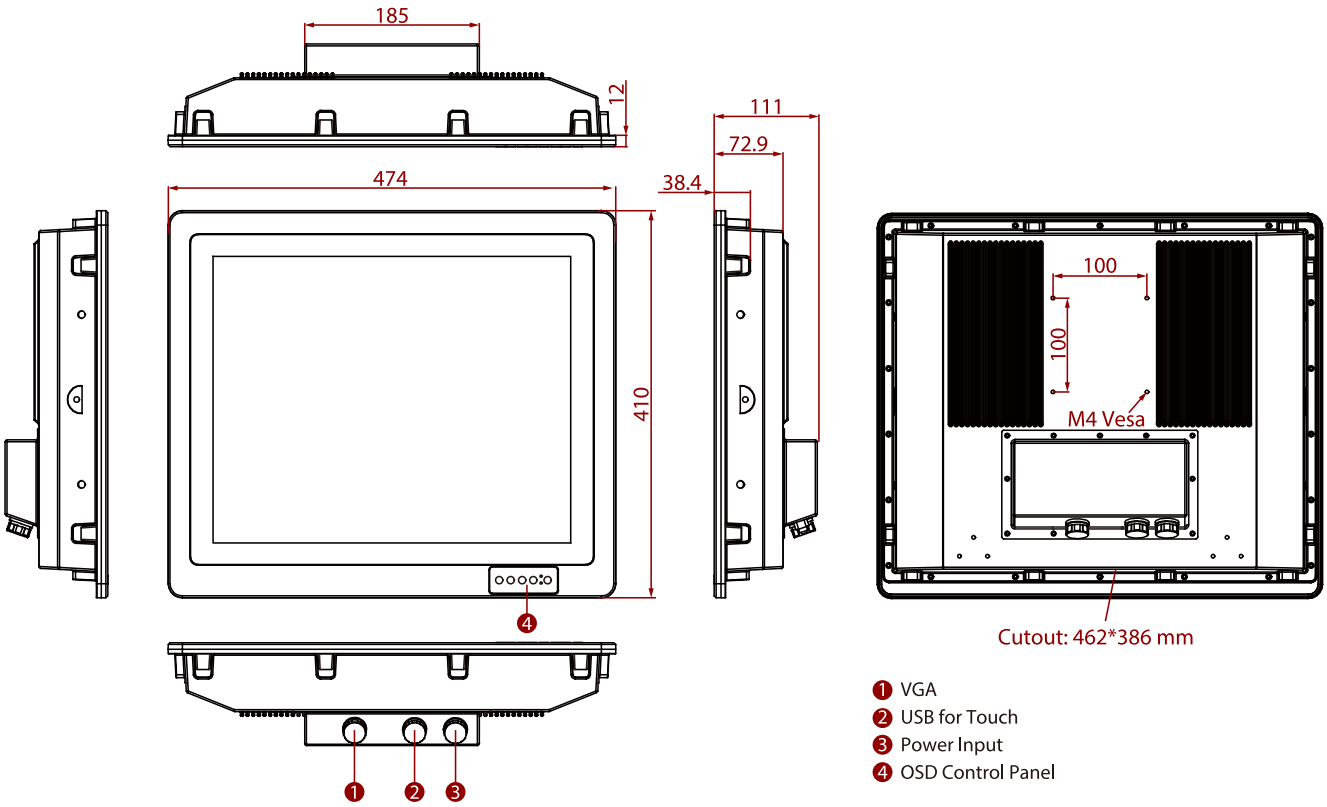

NOTE

1. This is a simplified drawing and some components are not marked in detail.
2. The product shown in this datasheet is a standard model. For diagrams that contain customized or optional I/O, please contact the Winmate Sales Team for more information.
3. All specifications are subject to change without prior notice.